Charnwood Skye E700d Low Stand Parts List

1st July 2025

Issue D

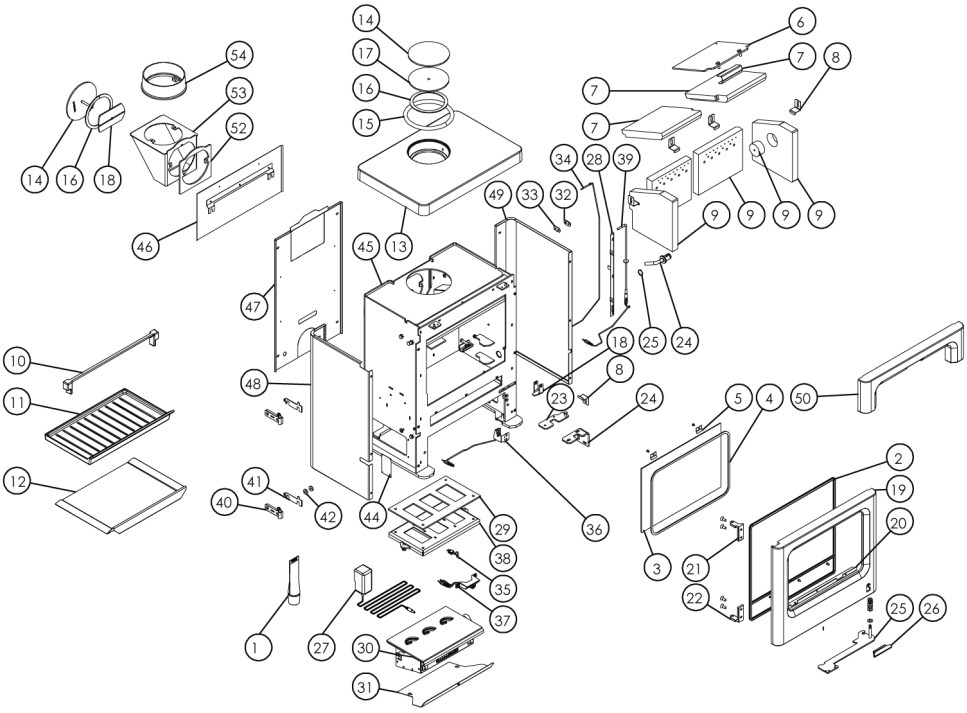

Item	Part No.	Description	Ex.Vat.	Inc.Vat.
1	008/TH085	Door Seal Adhesive	7.50	9.00
2	008/AU035S	Door Seal Inc Adhesive	23.00	27.60
3	006/AU018	Glass	71.00	85.20
4	008/EW45	Glass Seal Kit	14.50	17.40
5	004/KV23	Glass Retainer	0.76	0.91
6	010/DU032	Upper Throat Plate	31.00	37.20
7	011/AU031S	Set of Throat Plate Bricks Inc. Bracket	51.00	61.20
8	004/XV30	Brick Bracket	4.00	4.80
9	011/DU029S	Set of Fire Bricks	95.00	114.00
10	002/DU008	Deepening Bar	40.00	48.00
11	002/DU022	Grate	88.00	105.60
12	004/DU017	Ashpan	31.00	37.20
13#	003/CU006	Cast Top	150.00	180.00
14	010/KZ132	Blanking Plate	28.50	34.20
15	008/KZ136	Flue Fixing Rope Seal	9.85	11.82
16	008/KS134	Sealing Gasket (Flue)	4.15	4.98
17	010/KZ133	Blanking Plate Retainer	16.20	19.44
18	010/AY51	Clamping Plate	21.00	25.20
19#	003/CU001A	Door Assembly	300.00	360.00
20	004/AU050	Rope Seal Channel	21.50	25.80
21	002/BU041	Upper Hinge	29.50	35.40
22	002/BU042	Lower Hinge	29.50	35.40
23	010/CU063	Door Latch	8.90	10.68
24	010/CU064	Door Latch Bracket	5.50	6.60
25	010/CU060	Door Catch Arm	16.90	20.28
26	008/BU049	Door Handle	9.10	10.92
27	008/EL307	9V Power Supply	25.00	30.00
28	004/CU161	Light Optic Guard	7.50	9.00
29	008/CU109	Air Control Gasket	8.10	9.72
30	010/CU135	Air Control Assembly	420.00	504.00
31	004/CU042	Cable Tray	19.50	23.40
32	004/NH700	Thermocouple Retainer	2.50	3.00
33	004/NH701	Thermocouple Retainer Spacer	2.50	3.00
34	008/CU260	Firebox Thermocouple	35.00	42.00
35	008/CU261	Room Thermocouple	32.00	38.40
36	010/CU066	Switch and Bracket Assembly	37.00	44.40
37	010/CU250	Manual Control Button Assembly	40.00	48.00
38	010/CU230	Upper Airbox	32.00	38.40
39	010/CU160	Glass Rod Assembly	58.00	69.60
40	002/BU040	Door Hinge Bracket	23.50	28.20
41	004/BU039	Door Hinge Shim	7.75	9.30
42	010/DY24	Spacer	1.71	2.05
43*	012/CUL012	Compliance Label		
44	012/DUL011	Serial No. Label		
45#	001/DUL010	Firebox		
46#	005/AU081	Rear Heatshield	45.50	54.60
47#	005/AUL080	Rear Panel	49.50	59.40
48#	005/AUL093L	Left Side Panel	78.00	93.60
49#	005/AUL093R	Right Side Panel	78.00	93.60
50#	003/AUL072	Front Casting	87.00	104.40
51*	010/EW51	Ash Carrier (size 1)	132.00	158.40
52	010/AU021	Vertical Rear Flue Adapter Spacer	10.50	12.60
53#	010/TW33	Vert Rear Flue Adaptor (Opt'l Extra)	132.00	158.40
54#	002/XS14	Flue Collar	79.00	94.80
55*	008/EL308	9V Power Supply Extension Lead	8.00	9.60

*These items are not shown on the drawing.
Please specify colour when ordering. Prices are shown in pounds sterling with vat at 20% They are correct at the date shown but may be subject to change without notice. E. & O.E These prices are subject to a carriage charge

To obtain spare parts please contact your local stockist giving Model, Part No. and Description. In case of difficulty contact the manufacturer at the address shown. This drawing is for identification purposes only.

charnwood BISHOPS WAY, NEWPORT, ISLE OF WIGHT PO30 5WS, UNITED KINGDOM
T:+44 (0)1983 537799 • F:+44 (0)1983 537788 • WWW.CHARNWOOD.COM